Virus Research 189 (2014) 92–96

Contents lists available at ScienceDirect

Virus Research

journal homepage: www.elsevier.com/locate/virusres

Short communication

A new ophiovirus is associated with blueberry mosaic disease

Thanuja Thekke-Veetil[a], Thien Ho[a], Karen E. Keller[b], Robert R. Martin[b], Ioannis E. Tzanetakis[a,*]

[a] Department of Plant Pathology, Division of Agriculture, University of Arkansas System, Fayetteville, AR 72701, USA
[b] USDA-ARS, Corvallis, OR 97330, USA

ARTICLE INFO

Article history:
Received 23 April 2014
Received in revised form 16 May 2014
Accepted 17 May 2014
Available online 26 May 2014

Keywords:
Blueberry mosaic
Ophioviruses
Negative-strand RNA virus

ABSTRACT

Blueberry mosaic disease (BMD) was first described more than 60 years ago and is caused by a yet unidentified graft transmissible agent. A combination of traditional methods and next generation sequencing disclosed the presence of a new ophiovirus in symptomatic plants. The virus was detected in all BMD samples collected from several production areas of North America and was thus named blueberry mosaic associated virus. Phylogenetic analysis, supported by high bootstrap values, places the virus within the family *Ophioviridae*. The genome organization resembles that of citrus psorosis virus, the type member of the genus *Ophiovirus*. The implications of this discovery in BMD control and blueberry virus certification schemes are also discussed.

© 2014 Elsevier B.V. All rights reserved.

Blueberry is an important berry crop around the world and continues to grow in popularity among growers and consumers alike (Brazelton, 2013; Paredes-Lopez et al., 2010). One of the major constraints in production is diseases, several of which cause detrimental losses (Caruso and Ramsdell, 1995; Martin et al., 2012). Although there have been significant efforts to understand blueberry diseases and disorders, there are still several of unknown etiologies that affect the crop and cause significant losses (Caruso and Ramsdell, 1995; Martin et al., 2012). One of those diseases is mosaic, a disorder first reported in the 1950s in Michigan (Varney, 1957). Symptoms include mild to brilliant mottle and mosaic patterns on foliage (Fig. 1) that normally appear on few leaves but could expand to the majority of the canopy. Some reports associated the disease with late ripening, reduced yield, and poor berry quality (Ramsdell and Stretch, 1987). Since the first report, mosaic has been documented in several regions of North America including Arkansas, British Columbia, Indiana, Kentucky, New Jersey, New York, Oregon and Washington as well as several other parts of the globe including South America, Europe, New Zealand and South Africa (Varney, 1957; Martin et al., 2009).

There have been several unsuccessful attempts to identify the disease agent; initially it was thought to be a physiological chimera, but a virus etiology was later suggested (Varney, 1957; Raniere, 1960). Although a viroid was detected in mosaic plants (Zhu et al., 1995), it was later dismissed as the causal agent as there were symptomatic plants free of the agent (Martin et al., 2012). Efforts on purification of the agent and electron microscopic examination have been unsuccessful (Ramsdell and Stretch, 1987). This communication reports the genomic structure and molecular characterization of an ophiovirus detected in all mosaic infected samples; tentatively named blueberry mosaic associated virus (BlMaV).

Ophioviruses are named for the snake-like appearance (greek: όφις/ophis = snake) of the virions. Putative nucleoprotein complexes appear as circular structures of at least two different contour lengths that can be collapsed to form pseudo-linear coiled filaments (Milne et al., 1996) resembling to the structures observed in tenuiviruses and members of the *Bunyaviridae* (Ward, 1993). Ophioviruses are transmitted naturally by chytridiomycetes in the genus *Olpidium* (Morikawa et al., 1995; Roggero et al., 2000; Torok and Vetten, 2003) and have segmented genomes of three or four negative-sense RNAs which are individually encapsidated (Garcia, 2012). The RNAs encode a total of 4–7 proteins in the viral complimentary (vc) strands. RNA 1 encodes the RNA dependent RNA polymerase (RdRp) and a protein of unknown function (Vaira et al., 1997; van der Wilk et al., 2002; Naum-Ongania et al., 2003; Torok and Vetten, 2003). RNA 2 encodes the movement protein (MP; Hiraguri et al., 2013; Luna et al., 2013) which is probably also involved in suppression of post transcriptional gene silencing (PTGS) (Garcia, 2012; Kormelink et al., 2011). In mirafiori lettuce big-vein virus (MLBVV), one of the six ophioviruses identified to date, an additional putative protein of unknown function is reported in viral RNA 2 (van der Wilk et al., 2002). RNA 3 encodes the nucleocapsid protein (NP) (Vaira et al., 1997; Sanchez de la Torre

* Corresponding author. Tel.: +1 479 575 3180; fax: +1 479 575 7601.
E-mail address: itzaneta@uark.edu (I.E. Tzanetakis).

http://dx.doi.org/10.1016/j.virusres.2014.05.019
0168-1702/© 2014 Elsevier B.V. All rights reserved.

Fig. 1. Symptoms of blueberry mosaic disease. Affected bush shows yellow, yellowish green or pink mottle or mosaic pattern on leaves. (For interpretation of the references to color in figure legend, the reader is referred to the web version of the article.)

et al., 2002; van der Wilk et al., 2002; Torok and Vetten, 2003). A fourth RNA has been reported in MLBVV and lettuce ring necrosis virus (LRNV) and encodes one (LRNV) or two proteins (MLBVV) of unknown functions (van der Wilk et al., 2002; Torok and Vetten, 2003).

This study initiated with a 'Duke' blueberry plant collected in Arkansas in 2010, showing typical mosaic symptoms. Total nucleic acids (NAs) were extracted as described (Poudel et al., 2013) and used for degenerate oligonucleotide-primed reverse transcription (DOP-RT)-PCR (Telenius et al., 1992). Initial virus sequences were obtained using the Illumina platform as described (Laney et al., 2011). To confirm BlMaV association with the mosaic disease, cDNAs were prepared as described before (Poudel et al., 2013) from 35 diseased samples collected from Arkansas, British Columbia, Michigan and Oregon. Virus specific primers were designed from genomic RNAs and PCRs were conducted as described (Supplementary Table 1). Amplified products were purified and sequenced to verify the presence of the virus. After verification of BlMaV association with mosaic symptoms, the sequences of three genomic RNAs were completed by RT-PCR as previously described (Tzanetakis et al., 2005).

In order to explore the presence of a BlMaV RNA 4, DOP-RT-PCR was conducted as described in Ho et al. (2014) on dsRNAs extracted according to Tzanetakis and Martin (2008) from the original 'Duke' plant. The products were subjected to 454 Junior sequencing in two separate DOP-RT-PCR/454 combinations. In addition, two DOP-RT-PCR/454 experiments were performed on total RNAs depleted of plant ribosomal RNAs (Ribo-Zero™ Magnetic Kit, Epicenter Biotechnologies, WI). In all trials, sequences that showed no identity to NCBI nt and nr databases were specifically analyzed against all available *Ophioviridae* sequence data (NCBI taxid: 568247). Primers were designed from 12 sequences that showed limited similarity (*E* value ranging from 0.1 to 8) to the MLBVV and LRNV RNA 4 proteins, and RT-PCRs were conducted on 11 mosaic samples. In addition, a conserved region of 13 amino acids (aa) was identified in the MLBVV and LRNV 37 kDa protein orthologs coded by RNA 4. Degenerate forward primers were designed, and three separate PCRs were conducted (Supplementary Table 1); on cDNA synthesized from A-tailed RNA.

Table 1
Percentage (%) of amino acid identities of orthologous proteins of blueberry mosaic associated virus and other members of the family *Ophioviridae*. Abbreviations: CPsV – citrus psorosis virus, FreSV – freesia sneak virus, LRNV – lettuce ring necrosis virus, MLBVV – mirafiori lettuce big-vein virus, RWMV – ranunculus white mottle virus, TMMMV – tulip mild mottle mosaic virus.

Proteins	RdRp	NP	MP	22–25 kDa
MLBVV	38	29	18	12
LRNV	37	29	21	16
CPsV	42	35	37	8
TMMMV	NA[a]	27	NA	NA
RWMV	NA[a]	33	NA	NA
FreSV	NA[a]	27	NA	NA

RdRp – RNA dependent RNA polymerase; NP – nucleocapsid protein; MP – movement protein; NA – Not available.

[a] Only partial sequence of the RdRp is available.

The RNA binding domains present in BlMaV proteins were analyzed using BindN (Wang and Brown, 2006). The structures of the proteins were predicted by Phyre2 (Kelley and Sternberg, 2009), PSI-Pred (Jones, 1999), and J Pred (Cole et al., 2008). Protein-protein interactions were predicted using COTH (CO-THreader; Mukherjee and Zhang, 2011). The RdRp proteins of BlMaV and other negative-strand viruses belonging to the genera *Tenuivirus*, *Tospovirus*, *Rhabdovirus*, and *Varicosavirus* were employed in phylogenetic analysis using the Neighbor-joining method with 1000 bootstrap replicates on MEGA v.5 (Tamura et al., 2011).

BlMaV has a segmented genome of three negative-sense RNAs (Fig. 2) accounting for 11,467 nucleotides (nt) (GenBank accession numbers KJ704366-8). Multiple next-generation sequencing (NGS) reactions and PCRs using primers designed from the NGS data and conserved regions of the MLBVV/LRNV 37 kDa proteins failed to identify a BlMaV RNA 4.

RNA 1 is 7963 nt long, containing two ORFs that putatively encode the 272 kDa RdRp and a small 23 kDa protein separated by a 107 nt intergenic region, plus the 5′ and 3′ untranslated regions (UTR) of 238 and 19 nt, respectively. The presence of two ORFs with the same polarity in the largest RNA is a distinct genomic feature of *Ophioviridae* when compared to all other segmented negative-strand viruses (Naum-Onganıa et al., 2003). Within the intergenic region of the vcRNA 1, the canonical polyadenylation signal (PAS), 5′-AAUAAA-3′ (Zhao et al., 1999), was found 29 nt downstream of the 23 kDa ORF stop codon. The 5′-AAUAA-3′ PAS sequence, described for citrus psorosis virus (CPsV) RNA 1, was present twice downstream of the RdRp ORF.

The RdRp protein showed highest aa identity of 42% to its CPsV ortholog (Table 1) and had signature motifs of the *Mononegavirales* RdRps. The core polymerase module of 240 aa is found between positions Lys_{634}-Met_{873}. This region included the five conserved motifs proposed to be the part of the RdRp active site (Poch et al., 1989; Muller et al., 1994). Similar to RdRps of other family members, the BlMaV RdRp retained the majority of the conserved amino acid residues of *Mononegavirales* RdRp motifs A-D and premotif A (Supplementary Fig. 1). Motif C of CPsV, BlMaV, LRNV, MLBVV and ranunculus white mottle virus (RWMV; Vaira et al., 1997) was 100% identical to each other, and included the hallmark 'SDD' triad, present in all segmented negative-strand RNA virus RdRps (Biswas and Nayak, 1994). In motif D, a Gly residue common in LRNV,

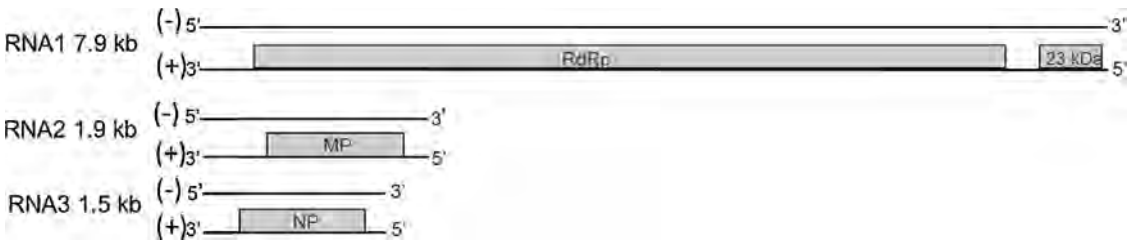

Fig. 2. Genome organization of blueberry mosaic associated virus; (−): negative-sense RNA (viral RNA); (+): positive sense RNA (viral complementary RNA); RdRp: RNA dependent RNA polymerase; MP: movement protein; NP: nucleocapsid protein.

MLBVV, and RWMV and other *Mononegavirales* members was substituted with an Asp residue in both $CPsV_{aa864}$ and $BlMaV_{aa863}$ (Supplementary Fig. 1). The protein also has a bipartite nuclear localization signal (NLS) (Nigg, 1997) between positions 1631 and 1647. This signal contained Lys_{1631} and Arg_{1632} residues separated by a 10 aa spacer, and three basic residues in the next five positions (KRMKNNTAHFYVKDKRI$_{1631-1647}$). Similar signals in RdRp were reported in CPsV, MLBVV, and RWMV (Naum-Onganıa et al., 2003).

The 23 kDa protein (nt 7944–7360) did not present any significant similarity to any known viral proteins in Blastp searches other than the low identity with its MLBVV, LRNV and CPsV p23 counterparts (Table 1). For this reason a RT-PCR assay was designed (Supplementary Table 1) which verified the presence of the ORF in all of the 11 isolates tested. Sequencing of the complete ORF of these isolates revealed 97–99% identity in the predicted protein sequences (data not shown). A bipartite NLS (KRSIRKLVIHDEKRKFF$_{158-174}$) was observed in the protein, but none of the other three sequenced ophioviruses had NLS in the 22–25 kDa protein. Presence of NLS in proteins encoded in RNA 1 could indicate their replication in the nucleus as in plant nucleorhabdoviruses (Naum-Onganıa et al., 2003). Analysis using three prediction programs yielded similar secondary structures but no significant identity to any known proteins (Supplementary Fig. 2).

RNA 2 is 1934 nt long and codes for the putative movement protein (MP; nt 1865–318) with molecular mass of 58 kDa. The 5′ and 3′ UTRs are 317 nt and 69 nt long, respectively. Two PAS were found in vcRNA 2 downstream of the 58 kDa ORF. The MP shared 37% identity with its counterpart in CPsV (Table 1). Recent studies described localization of the 54 kDa proteins of CPsV and MLBVV in the plasmodesmata and proved that the proteins are involved in virus movement (Hiraguri et al., 2013; Luna et al., 2013). The BlMaV MP has a conserved domain of 113 aa in the region, Ser_{380}-Glu_{492} (CDD; Marchler-Bauer et al., 2013), which is predicted to contain several β-sheets (Supplementary Fig. 2). This region may be involved in RNA binding (BindN; Wang and Brown, 2006), folding, targeting MP to plasmodesmata, and interacting with host proteins. *In silico* analysis (COTH; Mukherjee and Zhang, 2011) predicted possible self-interaction of BlMaV MP as well as interactions of MP with NP and p23. Interactions of MPs with NPs of CPsV and MLBVV were shown experimentally, indicating a potential role of NP in the movement of ophioviruses (Luna et al., 2013). The predicted interaction between BlMaV MP and NP could indicate functions similar to their orthologs. At present the role of p23 in ophiovirus infection cycle is unknown. There is a preliminary report that both MP and p23 act as silencing suppressors in ophioviruses (Kormelink et al., 2011). Given that some plant virus silencing suppressors are involved in long distance movement (Bayne et al., 2005), the predicted interaction of BlMaV p23 with the MP protein could be orchestrating silencing suppression and/or long distance movement.

RNA 3 encodes a 50 kDa NP (nt 1493–129) which shared 38% identity to the CPsV ortholog (Table 1). The 1570 nt RNA has 5′ and 3′ UTRs of 128 nt and 77 nt respectively. A PAS-like sequence, 5′-AUUAAA-3′ was observed in vcRNA 3 downstream the NP ORF. The putative NP contained a conserved domain of NPs of negative-strand ssRNA viruses between the regions Arg_{244}-Glu_{422} and this region was rich in α-helices (Supplementary Fig. 2). Bioinformatics analysis (COTH, Mukherjee and Zhang, 2011) predicted self-interaction of NP molecules which indicated a possible dimer formation *in vivo*. The NPs of CPsV and MLBVV are reported to be localized in the cytoplasm of the infected cells and were shown to be self-interacting (Pena et al., 2012) similar to the *in silico* predictions for BlMaV.

Comparison of UTRs of the genomic RNAs showed that the 5′ terminal sequences were not highly-conserved between RNAs. All RNAs initiated with the binucleotide 'AU' and shared 46–56% identity between 5′ UTRs. The 3′ termini were conserved with identical six nucleotides (5′-AAUAUC-3′). By comparison, CPsV RNAs have a conserved 12-nt sequence, A_7GUAUC, resembling the A_{4-6}UAAUC found in MLBVV RNAs (van der Wilk et al., 2002). The identity between the 3′ UTRs of all three RNAs ranged between 59 and 63%. The extreme 3′ ends of RNAs 2 and 3 were more conserved compared to their RNA 1 counterpart having 25 of the last 29 nt identical. No complementarity was found between the 5′ and 3′ ends of each genomic RNA but all 5′ termini folded into conserved stem-loop structures (Mfold; Zuker, 2003). These structures may be involved in packaging of genomic RNAs or in the long distance interactions for transcription and replication.

Phylogenetic analysis performed on the RdRps of BlMaV and representative negative-strand plant RNA viruses from the *Mononegaviales* order placed the virus with the members of the *Ophioviridae* (Fig. 3). BlMaV clustered with CPsV to one group, whereas MLBVV and LRNV grouped to another. The family *Ophioviridae* is currently composed of six viruses; MLBVV, LRNV, CPsV, RWMV, freesia sneak virus (FreSV; Vaira et al., 2006) and tulip mild mottle mosaic virus (TMMMV; Morikawa et al., 1995). Among those, full genome sequences are available only for the first three. Comparison of the genome organization and phylogenetic analysis indicated that BlMaV is more closely related to CPsV than any other member of the family. The segmented genome of BlMaV includes three RNAs, similar to CPsV, the type member of the family (Martin et al., 2005), compared to four RNAs in LRNV and MLBVV (van der Wilk et al., 2002; Torok and Vetten, 2003). The 5′ and 3′ UTR terminal sequences are complimentary in LRNV and MLBVV and such complementarity in termini of genomic RNAs was not exhibited by either BlMaV or CPsV (Naum-Onganıa et al., 2003). The protein sequences of BlMaV were more similar to the orthologs in CPsV (except for p23). Based on these distinct differences (genome segments, nature of genome termini and protein orthologies) between the four viruses, we suggest grouping of MLBVV with LRNV into one genus and CPsV and BlMaV to another within the *Ophioviridae*.

The presence of BlMaV was confirmed in 35 mosaic samples collected from three states in the US and British Columbia, Canada, which provides an absolute association of the virus and the disease. The virus was also detected in two asymptomatic plants

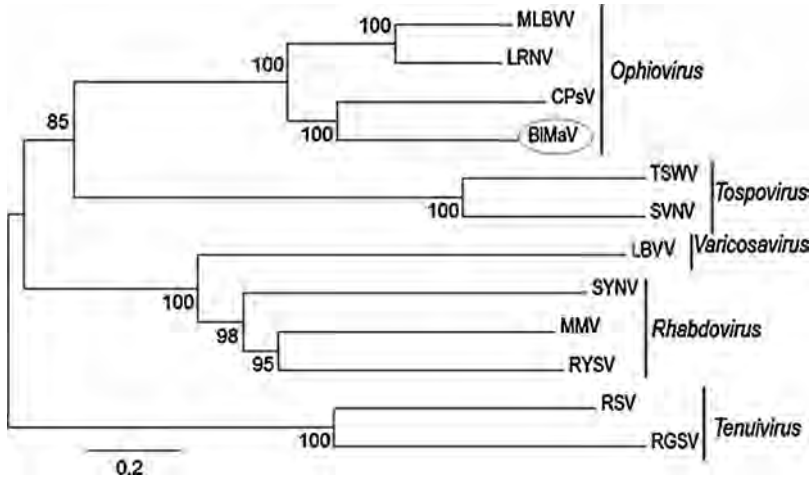

Fig. 3. Phylogenetic analysis using the RNA dependent RNA polymerase protein sequences of blueberry mosaic associated virus (BlMaV) and other negative-strand RNA viruses. Branch lengths are proportional to genetic distances between sequences. The tree was generated by the neighbor-joining method and bootstrap values (indicated for each branch node) were estimated using 1000 replicates. Branch lengths are proportional to genetic distances between sequences and the scale bar represents substitutions per amino acid site. LRNV – lettuce ring necrosis virus (Acc. No. YP_053236), MLBVV – mirafiori lettuce big-vein virus (Acc. No. NP_848527), CPsV – citrus psorosis virus (Acc. No. YP_089661), TSWV – tomato spotted wilt virus (Acc. No. AEB33901.1), SVNV – soybean vein necrosis virus (Acc. No. ADX01591), RGSV – rice grassy stunt virus (Acc. No. NP_058528), RSV – rice stripe virus (Acc. No. AFM93820), LBVV – lettuce big-vein virus (Acc. No. AFA36170), SYNV – sonchus yellow net virus (Acc. No. P31332), MMV – maize mosaic virus (Acc. No. Q6E0W6), RYSV – rice yellow stunt virus (Acc. No. O10378).

in Arkansas. The 'Duke' plant used in genome characterization also exhibited a symptom-free period in which the virus was easily detectable by RT-PCR. These observations indicate that BlMaV could exist in asymptomatic plants in the fields and nurseries alike. The importance of this observation has major implication in disease epidemiology as asymptomatic plants could serve as pathogen reservoirs, often spreading the disease to highly susceptible cultivars and leading to potential yield losses. Since blueberries are propagated asexually, the virus could be introduced to new growing areas inadvertently through nursery plants propagated from asymptomatic stock. As ophioviruses are transmitted by soil-borne fungi, BlMaV could survive in the spores of its vector(s) in infected roots and soil leading to disease spread. The discovery and characterization of BlMaV will allow for the development of sensitive detection assays that will assist in nursery and field screening for the virus and will eventually have a significant impact on the nascent blueberry certification program under evaluation in the United States and elsewhere in the world.

Acknowledgements

The authors acknowledge the funding provided by the Southern Region Small Fruit Consortium (Projects #2011–13 and 2012–07) and USDA-NCPN (12-8100-1572-CA) for this study. We thank Dr. M. Elena Garcia (University or Arkansas) and Annemiek Schilder (Michigan State University) for providing material used in the study.

Appendix A. Supplementary data

Supplementary data associated with this article can be found, in the online version, at http://dx.doi.org/10.1016/j.virusres.2014.05.019.

References

Bayne, E.H., Rakitina, D.V., Morozov, S.Y., Baulcombe, D.C., 2005. Cell-to-cell movement of potato potexvirus X is dependent on suppression of RNA silencing. Plant J. 44, 471–482.

Biswas, S.K., Nayak, D.P., 1994. Mutational analysis of the conserved motif of influenza A virus polymerase basic protein 1. J. Virol. 68, 1819–1826.

Brazelton, C., 2013. World Blueberry Acreage and Production. North American Blueberry Council, Folsom, CA, pp. 1–76.

Caruso, F.L., Ramsdell, D.C., 1995. Compendium of Blueberry and Cranberry Diseases. APS Press, St. Paul, MN, USA.

Cole, C., Barber, J.D., Barton, G.J., 2008. The Jpred 3 secondary structure prediction server. Nucleic Acids Res. 36, W197–W201.

Garcia, M.L., 2012. Ophioviruses: state of the art. In: Garcia, M.L., Romanowski, V. (Eds.), Viral Genomes – Molecular Structure, Diversity, Gene Expression Mechanisms and Host-Virus Interactions. In Tech Publishing, Rijeka, Croatia, pp. 69–88.

Hiraguri, A., Ueki, S., Kondo, H., Nomiyama, K., Shimizu, T., Ichiki-Uehara, T., Omura, T., Sasaki, N., Nyunoya, H., Sasaya, T., 2013. Identification of a movement protein of Mirafiori lettuce big-vein ophiovirus. J. Gen. Virol. 94, 1145–1150.

Ho, T., Sharma, A., Barabote, R., Tzanetakis, I.E., 2014. Developing Plant Virus Detection and Discovery Pipeline using Next Generation Sequencing (submitted for publication).

Jones, D.T., 1999. Protein secondary structure prediction based on position-specific scoring matrices. J. Mol. Biol. 292, 195–202.

Kelley, L.A., Sternberg, M.J.E., 2009. Protein structure prediction on the web: a case study using the Phyre server. Nat. Protoc. 4, 363–371.

Kormelink, R., Garcia, M.L., Goodin, M., Sasaya, T., Haenni, A., 2011. Negative-strand RNA viruses: the plant-infecting counterparts. Virus Res. 162, 184–202.

Laney, A.G., Keller, K.E., Martin, R.R., Tzanetakis, I.E., 2011. A discovery 70 years in the making: characterization of the Rose rosette virus. J. Gen. Virol. 92, 1727–1732.

Luna, G.R., Pena, E.J., Borniego, M.B., Heinlein, M., Garcia, M.L., 2013. Ophioviruses CPsV and MiLBVV movement protein is encoded in RNA 2 and interacts with the coat protein. Virology 441, 152–161.

Marchler-Bauer, A., Zheng, C., Chitsaz, F., Derbyshire, M.K., Geer, L.Y., Geer, R.C., Gonzales, N.R., Gwadz, M., Hurwitz, D.I., Lanczycki, C.J., Lu, F., Lu, S., Marchler, G.H., Song, J.S., Thanki, N., Yamashita, R.A., Zhang, D., Bryant, S.H., 2013. CDD: conserved domains and protein three-dimensional structure. Nucleic Acids Res. 41, 348–352.

Martin, R.R., Polashock, J.J., Tzanetakis, I.E., 2012. New and emerging viruses of blueberry and cranberry. Viruses 4, 2831–2852.

Martin, R.R., Tzanetakis, I.E., Caruso, F.L., Polashock, J.J., 2009. Emerging and reemerging virus diseases of blueberry and cranberry. Acta Hort. 810, 299–304.

Martin, S., Lopez, C., Garcia, M.L., Naum-Ongania, G., Grau, O., Flores, R., Moreno, P., Guerri, J., 2005. The complete nucleotide sequence of a Spanish isolate of Citrus psorosis virus: comparative analysis with other ophioviruses. Arch. Virol. 150, 167–176.

Milne, R.G., Djelouah, K., Garcia, L.M., Dal Bo, E., Grau, O., 1996. Structure of citrus psorosis-associated virus particles: implications for diagnosis and taxonomy. In: Graca, J.V., da Moreno, P., Yokomi, R.K. (Eds.), Proceedings of the 14th Conference of the International Organization of Citrus Virologists. University of California, Riverside, CA, USA, pp. 189–197.

Morikawa, T., Nomura, Y., Yamamoto, T., Natsuaki, T., 1995. Partial characterization of virus-like particles associated with tulip mild mottle mosaic. Ann. Phytopathol. Soc. Jpn. 61, 578–581.

Mukherjee, S., Zhang, Y., 2011. Protein–protein complex structure prediction by multimeric threading and template recombination. Structure 19, 955–966.

Muller, R., Poch, O., Delaure, M., Bishop, D.H.L., Bouloy, M., 1994. Rift valley fever virus L segment: correction of the sequence and possible functional role of newly identified regions conserved in RNA-dependent polymerases. J. Gen. Virol. 75, 1345–1352.

Naum-Onganıa, G., Gago-Zachert, S., Pena, E., Grau, O., Garcıa, M.L., 2003. Citrus psorosis virus RNA 1 is of negative polarity and potentially encodes in its complementary strand a 24 K protein of unknown function and 280 K putative RNA dependent RNA polymerase. Virus Res. 96, 49–61.
Nigg, E.A., 1997. Nucleocytoplasmic transport: signals, mechanisms and regulation. Nature 386, 779–787.
Paredes-Lopez, O., Cervantes-Ceja, M.L., Vigna-Perez, M., Hernandez-Perez, T., 2010. Berries: improving human health and healthy aging, and promoting quality life – a review. Plant Foods Hum. Nutr. 65, 299–308.
Pena, E.J., Luna, G.R., Zanek, M.C., Borniego, M.B., Reyes, C.A., Heinlein, M., Garcia, M.L., 2012. Citrus psorosis and Mirafiori lettuce big-vein ophiovirus coat proteins localize to the cytoplasm and self-interact in vivo. Virus Res. 170, 34–43.
Poch, O., Sauvaget, I., Delarue, M., Tordo, N., 1989. Identification of four conserved motifs among the RNA-dependent RNA polymerase encoding elements. EMBO J. 8, 3867–3874.
Poudel, B., Wintermantel, W.M., Cortez, A.A., Ho, T., Khadgi, A., Tzanetakis, I.E., 2013. Epidemiology of Blackberry yellow vein associated virus. Plant Dis. 97, 1352–1357.
Ramsdell, D.C., Stretch, A.W., 1987. Blueberry Mosaic. In: Converse, R.H. (Ed.), Virus Diseases of Small Fruits. Agriculture Handbook No. 631, US Department of Agriculture, Washington, DC, USA, pp. 119–120.
Raniere, L.C., 1960. Responses of cultivated high bush blueberry varieties to the known blueberry viruses. In: Proceedings of the Twenty-eighth Annual Blueberry Open House, 28, pp. 18–20.
Roggero, P., Ciuffo, M., Vaira, A.M., Accotto, G.P., Masenga, V., Milne, R.G., 2000. An ophiovirus isolated from lettuce with big-vein symptoms. Arch. Virol. 145, 2624–2629.
Sanchez de la Torre, M.E., Lopez, C., Grau, O., Garcia, M.L., 2002. RNA 2 of Citrus psorosis virus is of negative polarity and has a single open reading frame in its complementary strand. J. Gen. Virol. 83, 1777–1781.
Tamura, K., Peterson, D., Peterson, N., Stecher, G., Nei, M., Kumar, S., 2011. MEGA5: molecular evolutionary genetics analysis using maximum likelihood, evolutionary distance, and maximum parsimony methods. Mol. Biol. Evol. 28, 2731–2739.
Telenius, H., Carter, N.P., Bebb, C.E., Nordenskjold, M., Ponder, B.A., Tunnacliffe, A., 1992. Degenerate oligonucleotide-primed PCR: general amplification of target DNA by a single degenerate primer. Genomics 13, 718–725.
Torok, V.A., Vetten, J., 2003. Identification and molecular characterization of a new ophiovirus associated with lettuce ring necrosis disease. In: Proceedings of Arbeitskreis Viruskrankheiten der Pflanzen, March 27–28, Heidelberg, Germany.
Tzanetakis, I.E., Postman, J.D., Martin, R.R., 2005. Characterization of a novel member of the *Closteroviridae* from *Mentha*. Phytopathology 95, 1043–1048.
Tzanetakis, I.E., Martin, R.R., 2008. A new method for extraction of double stranded RNA from plants. J. Virol. Methods 149, 167–170.
Vaira, A.M., Lisa, V., Costantini, A., Masenga, V., Rapetti, S., Milne, R.G., 2006. Ophioviruses infecting ornamentals and a probable new species associated with a severe disease in freesia. Acta Hortic. 722, 191–199.
Vaira, A.M., Milne, R.G., Accotto, G.P., Luisoni, E., Masenga, V., Lisa, V., 1997. Partial characterization of a new virus from ranunculus with a divided RNA genome and circular supercoiled thread-like particles. Arch. Virol. 142, 2131–2146.
van der Wilk, F., Dullemans, A.M., Verbeek, M., van den Heuvel, J.F.J.M., 2002. Nucleotide sequence and genomic organization of an ophiovirus associated with lettuce big-vein disease. J. Gen. Virol. 83, 2869–2877.
Varney, E.H., 1957. Mosaic and shoestring virus diseases of cultivated blueberry in New Jersey. Phytopathology 47, 307–309.
Wang, L., Brown, S.J., 2006. BindN: a web-based tool for efficient prediction of DNA and RNA binding sites in amino acid sequences. Nucleic Acids Res. 34, W243–W248.
Ward, C.W., 1993. Progress towards a higher taxonomy of viruses. Res. Virol. 144, 419–453.
Zhao, J., Hyman, L., Moore, C., 1999. Formation of mRNA 3′ ends in eukaryotes: mechanism, regulation, and interrelation with other steps in mRNA synthesis. Microbiol. Mol. Biol. Rev. 63, 405–445.
Zhu, S.F., Gillet, J.M., Ramsdell, D.C., Hadidi, A., 1995. Isolation and characterization of viroid-like RNAs from mosaic diseased blueberry tissue. Acta Hortic. 385, 132–140.
Zuker, M., 2003. Mfold web server for nucleic acid folding and hybridization prediction. Nucleic Acids Res. 31, 3406–3415.